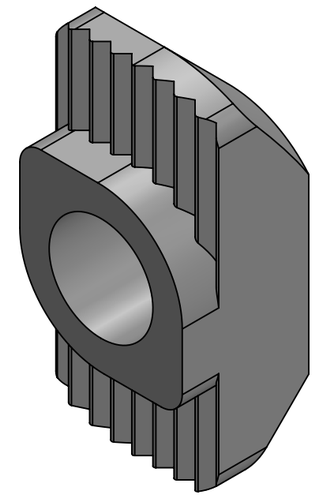

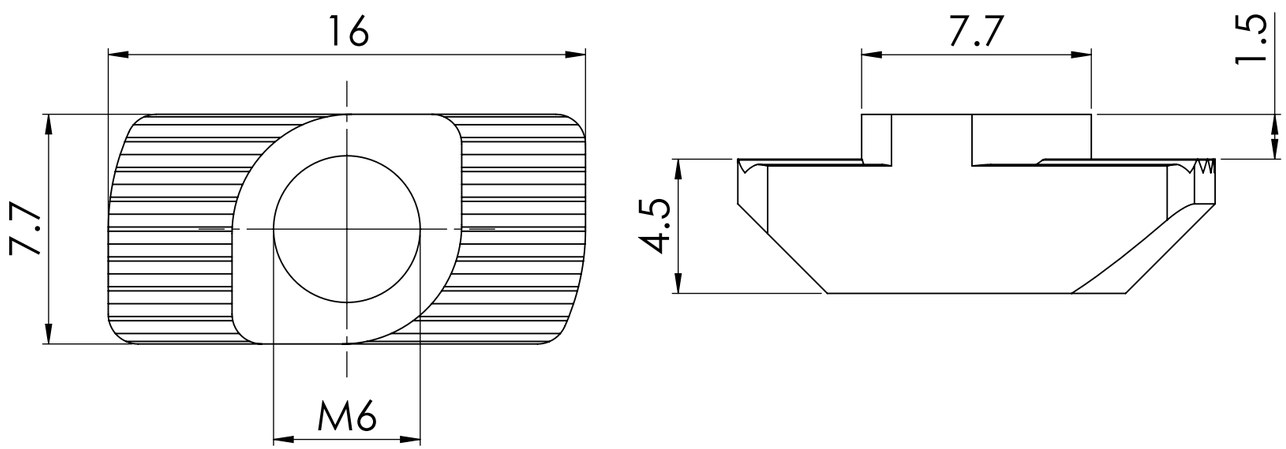

NOTE :-
ALL UNMENTIONED FILLETS ARE 0.2 MM

		UNLESS OTHERWISE SPECIFIED:		NAME	DATE
		DIMENSIONS ARE IN MILLIMETERS TOLERANCES: FRACTIONAL ± ANGULAR: MACH ± BEND ± TWO PLACE DECIMAL ± THREE PLACE DECIMAL ±	DRAWN		
			CHECKED		
			ENG APPR.		
			MFG APPR.		
		INTERPRET GEOMETRIC TOLERANCING PER: ISO 2768 MEDIUM	Q.A.		
		MATERIAL	PROJECTION: THIRD ANGLE PROJECTION		
NEXT ASSY	USED ON	FINISH			
APPLICATION		DO NOT SCALE DRAWING	DEBURR AND BREAK SHARP EDGES		

TITLE:

SIZE	DWG. NO.	REV
B	482536602	

SCALE: 5:1 | WEIGHT: | SHEET 1 OF 1